ANALOG DEVICES

8-Lead Standard Small Outline Package, with Increased Creepage [SOIC_IC] Wide Body (RI-8-1)

Dimensions shown in millimeters.

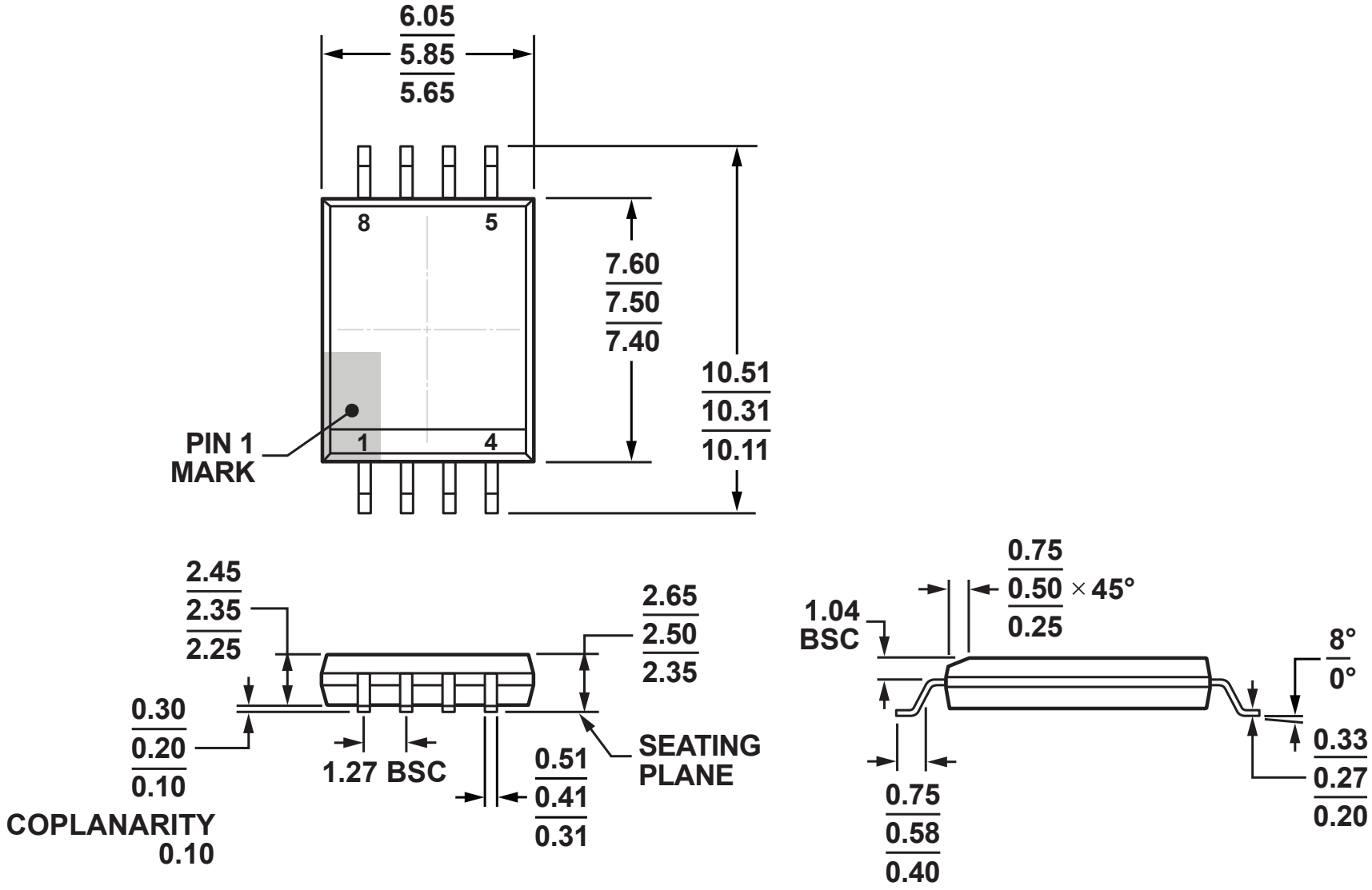

09-17-2014-B